DECKING

VersiFrame®

Aluminium Joist for Deck Support

ELMICH

Creating Cities
Where Urban Meets Nature

Our Innovation Your Solution

VersiFrame® Aluminium Joist is developed for use with VersiJack® height-adjustable pedestals to create a substructure for raised decking systems. It allows for an increased level of versatility and stability.

100%
Recyclable

VersiFrame®

VersiFrame® is an aluminium joist system developed to be used in conjunction with VersiJack® pedestals to construct a more stable and versatile substructure for raised decking. It improves heat and sound insulation, facilitates rapid surface drainage and creates an easily accessible chamber to conceal mechanical and electrical services.

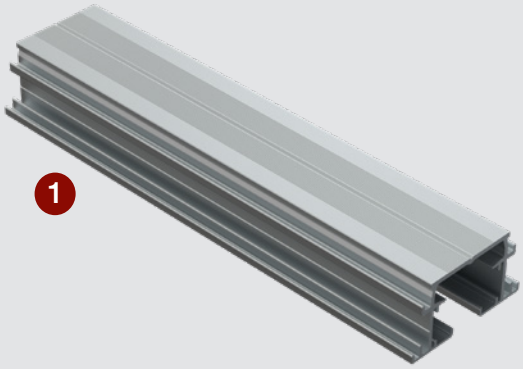

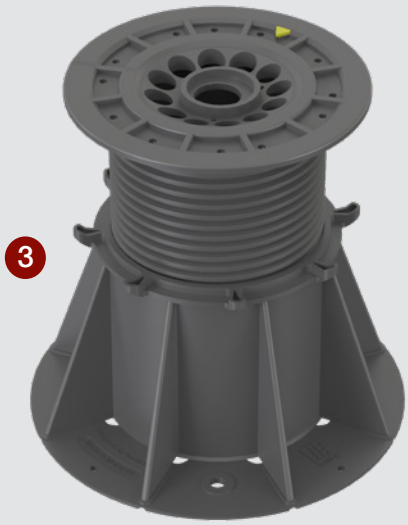

About VersiFrame®

VersiFrame® comes in two sizes, 25 mm or 35 mm high. It is complemented by a comprehensive list of accessories to accommodate installations of various requirements.

VersiFrame® is connected to VersiJack® pedestals using an adaptor and once locked in place, the substructure prevents pedestals from unintended movement during installation, maintenance and everyday traffic atop the raised deck.

VersiFrame® comes with a corrugated flat top to allow simple and accurate fastening of any unique deck board clip for its specific deck board profile.

1 VersiFrame® Aluminium Joist

VersiFrame® Aluminum Joist is designed for seamless compatibility with most conventional fixings and deck board profiles available in the market.

2 Joist Adaptor

Joist Adaptor is used to connect aluminium joists securely to the pedestal.

3 Pedestal

VersiJack® height-adjustable pedestals can be used with the VersiFrame® Aluminium Joist, offering a high strength, durable, and reliable substructure for decking installations.

VersiFrame® Accessories

Perpendicular Joist Joiner

Perpendicular Joist Joiner allows one end of a joist to connect perpendicularly along the length of another joist.

Straight Joist Joiner

Straight Joist Joiner is a concealed joiner that connects 2 joists in a straight line.

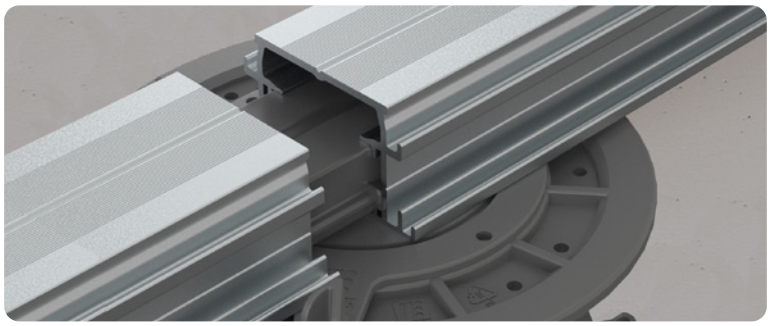

Vertical Edge Clips

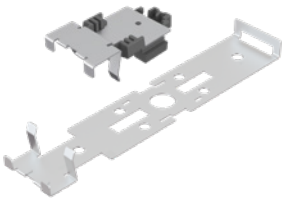

Vertical Edge Clips allow decks to be installed upright to create a closed edge installation.

SnapClip™

SnapClip™ concealed fastening system works with grooved-edge composite boards which can be removed and replaced easily.

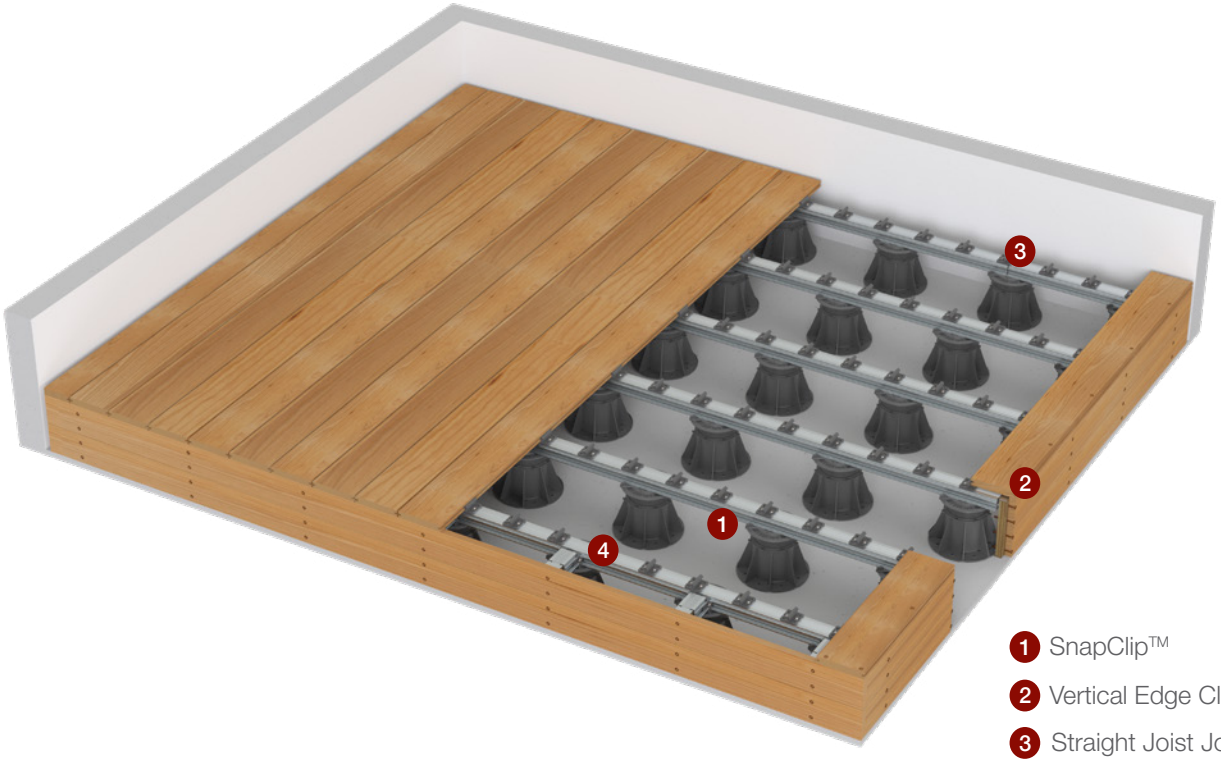

1. SnapClip™
2. Vertical Edge Clips
3. Straight Joist Joiner
4. Perpendicular Joist Joiner

Technical Specifications

	VersiFrame® 25F	VersiFrame® 35F
Material	Aluminium[1]	
Linear thermal expansion coefficient	$2.34 \times 10^{-5}\ K^{-1}$	
Supply length (m)	2.4	
Height (mm)	25	35
Design span along joist (mm)		
Live load[2] @ 3.0 kN/m²	600	900
Live load[3] @ 5.0 kN/m²	400	600
Biological / Chemical resistance	Unaffected by moulds and algae. Resistant to corrosion	

[1] *A6063 T5*
[2] *Uniformly distributed live loads on residential raised floor balconies should not exceed 3.0 kN/m².*
[3] *Uniformly distributed live loads on commercial raised floor areas should not exceed 5.0 kN/m².*

The Elmich security hologram ensures authenticity of the products.

Distributed by:

Note: The information provided in this brochure is based on current knowledge and experience and does not infer any legally binding assurance or warranty, expressed or implied. Intending purchasers should verify whether any changes to specifications or applications or otherwise have been made since the issue of this literature. Environmentally-friendly recycled materials are used in product manufacture wherever possible. Physical product properties including colour may differ due to source of raw materials used. Colour may also fade due to UV exposure. All components of the product are designed for specific application, design calculations and any variation and/or deviation therefrom shall be the responsibility of the specifier and/or user.

ELMICH PTE LTD www.elmich.com
Singapore: (+65) 6356 2800
info@elmich.com
Singapore | Australia | Germany | Malaysia | Switzerland | USA